# AT330

## SIDE VIEW

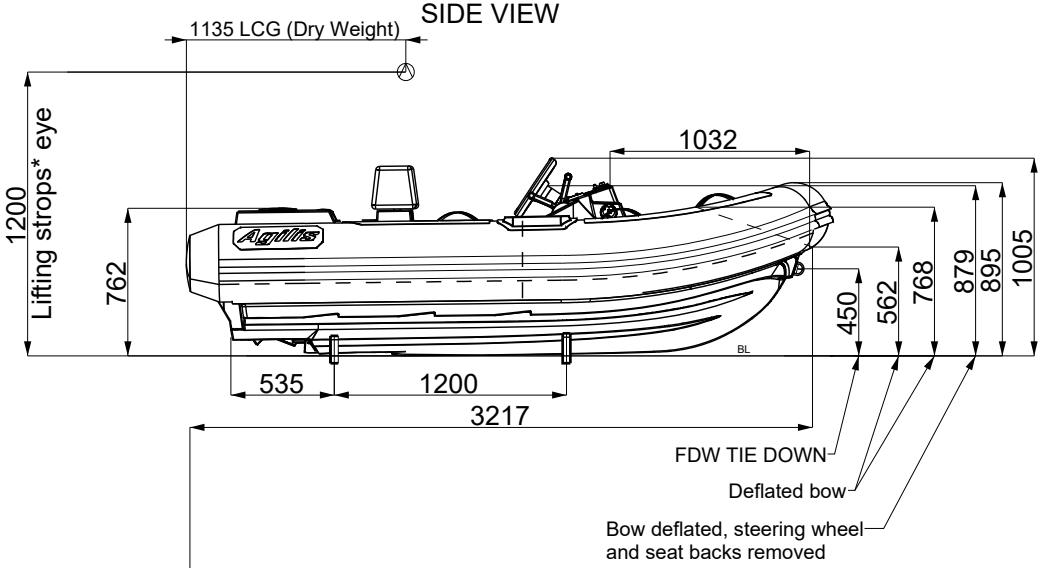


## AFT VIEW

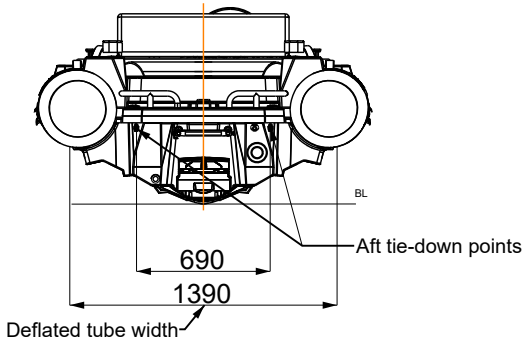


## TOP VIEW

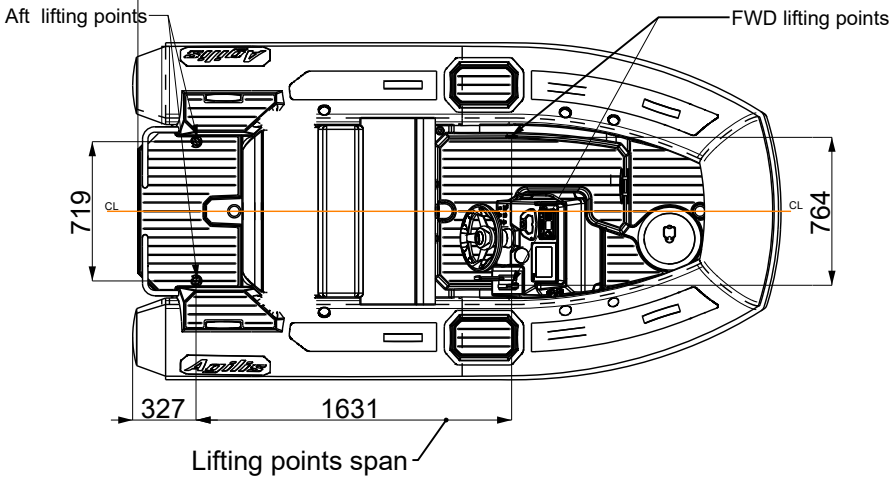


*Technical data:*

*1.Length Overall:.....3.30 m, +/-1%*
*2.Beam Overall:.....1.75 m, +/-1%*
*3.Seating capacity:.....4*
*4. Light craft mass:.....325 kg*
*5. Maximum load:.....340 kg (fuel excluded)*
*6. Maximum speed, V = 38 knots*
*7. CE Design Category "C"*
*8.Engine: Rotax 900 HO ACE (90 HP/66 kW)*
*9. Propulsion: Jet drive*
*10. Fuel tank capacity: .....55 litres, petrol*
*11. No. of tube Compartments:..... 4*

| | | | | | |
|---|---|---|---|---|---|
| UNLESS OTHERWISE SPECIFIED: DIMENSIONS ARE IN MILLIMETERS SURFACE FINISH: TOLERANCES: LINEAR: ANGULAR: | FINISH: | | DEBURR AND BREAK SHARP EDGES | DO NOT SCALE DRAWING | REVISION |
| | | | | This drawing is the property of Agilis Jet Tenders GmbH/ Lohfeldstr.2/ 52428 Jülich. This information must not be reproduced, distributed, or used fore any purpose other than in conjunction with the boat or design for which it was drawn, without the owner's written consent. | |
| | NAME | SIGNATURE | DATE | TITLE: AT330 - General Arrangement | |
| DRAWN | | | | | |
| CHK'D | | | | | |
| APPV'D | | | | | |
| MFG | | | | | |
| Q.A | | | | MATERIAL: | DWG NO. AT330-000-001 A2 |
| | | | | WEIGHT: | SCALE:1:20 SHEET 1 OF 1 |