AT560

SIDE VIEW

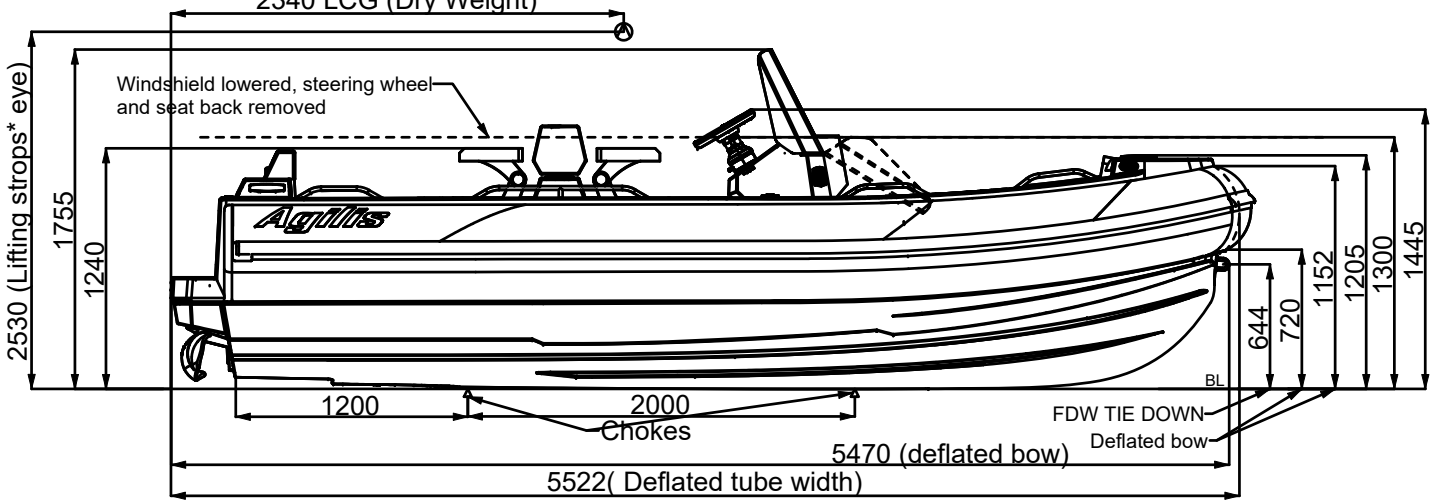

AFT VIEW

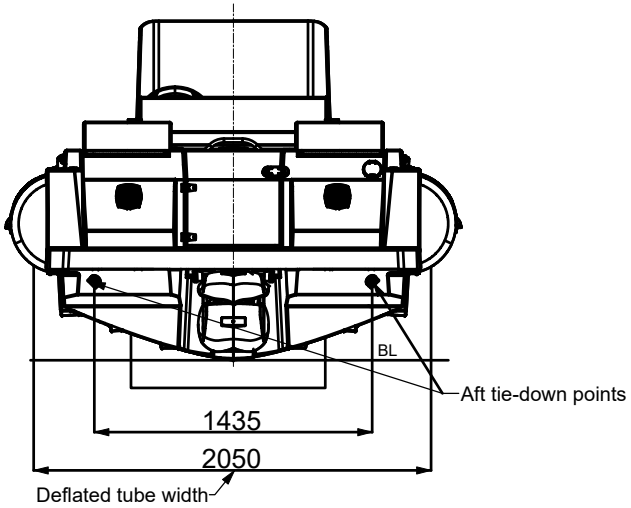

SIDE VIEW (reduced profile with single lifting point, optional)

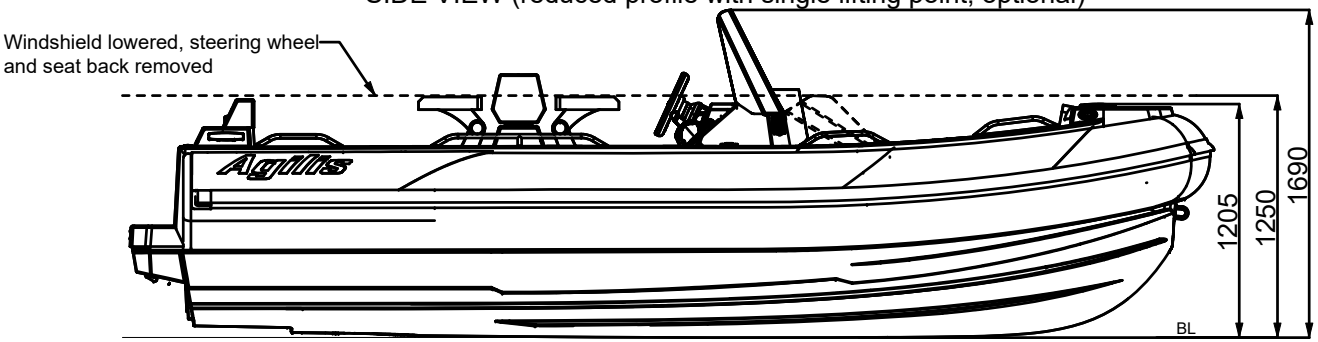

TOP VIEW

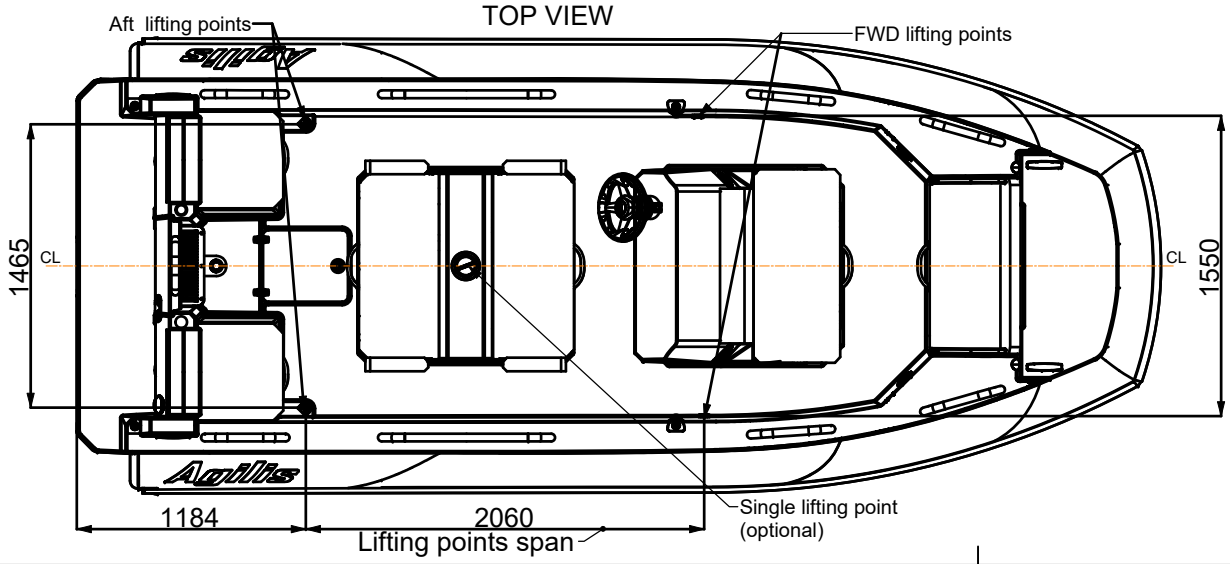

Technical data:

1. *Length Overall:.....5.60 m, +/-1%*
2. *Beam Overall:.....2.35 m, +/-1%*
3. *Seating capacity:.....10*
4. *Bare boat mass:.....1260 kg*
5. *Maximum load:.....1200 kg (fuel excluded)*
6. *Maximum speed, V = 38 knots*
7. *CE Design Category "C"*
8. *Engine: Mercury Diesel 2.0L (170 HP/125kW)*
   Mercury Diesel 3.0L (270 HP/198kW) optional
9. *Propulsion: Jet drive*
10. *Fuel tank capacity: .....120 L, diesel*
11. *No. of tube Compartments:..... 6*

UNLESS OTHERWISE SPECIFIED: DIMENSIONS ARE IN MILLIMETERS SURFACE FINISH: TOLERANCES: LINEAR: ANGULAR:	FINISH:		DEBURR AND BREAK SHARP EDGES	DO NOT SCALE DRAWING	REVISION
				This drawing is the property of Agilis Jet Tenders GmbH/ Lohfeldstr.2/ 52428 Jülich. This information must not be reproduced, distributed, or used fore any purpose other thanin conjunction with the boat or design for which it was drawn, without the owner's written consent.	
	NAME	SIGNATURE	DATE	TITLE: AT560 - General Arrangement	
DRAWN					
CHK'D					
APPV'D					
MFG					
Q.A				MATERIAL:	DWG NO. AT560-000-001	A2
				WEIGHT:	SCALE:1:20	SHEET 1 OF 1